Warren
Bedside Table - Large

DIMENSIONS
30”L x 18”W x 30”H

FEATURES
- Hardwood construction
- Mitered corners
- Open shelf with finished back
- Solid wood dovetail drawer
- Pre-finished maple interior drawer that is full extension & soft-closing
- Invisible glides
- All finishes fall below the Greenguard Limit for VOC content

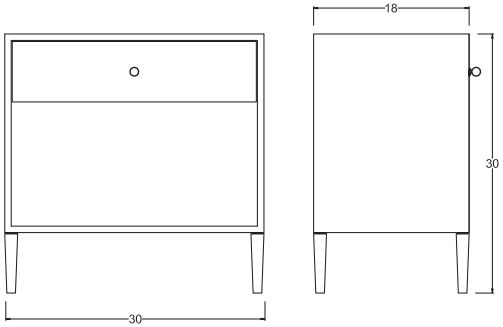

Wood Finishes

Walnut White Oak

Hardware

Polished Nickel Polished Brass Oil Rubbed Bronze

Paint & High Gloss Lacquer Colors

Modern White Paperwhite Pewter Juniper Big Sky Blue Oxford Blue Cheeky Coral Geranium Twilight

ziggy
STUDIOZIGGY.COM